Keypads

www.langir.com

RoHS COMPLIANCE

langir

Features:

Maximum reliability and durability, Ideal for use in rough environments.
IP68 Dust and water resistant, Sea-water and detergent resistant.
No moving part, maintenance free.
Made of one piece of solid metal, totally rugged.
Potted switching unit at rear seals against all contamination and prevents freezing.
Flexible anodize print or laser engrave layout.

KP-□□□□-□-□——□——□——□□

Housing:
A =Aluminum
S =Stainless Steel 316L

Lettering:
0 Laser engraving
1 Anodize printing

Connection:
P =Pins
C =Flat cable

Surface:
F =Flat
Z =Protuberant

Circuitry:
M =Matrix
B =Common bus

Key No.:
34 =3X4
43 =4X3
44 =4X4
45 =4X5
54 =5X4

Marking:
Custom Marking Available

Electrical Specifications:

Switching voltage max.: 24VDC
Switching current max.: 200mA
Lifetime electrical: 15mill.
Insulation resistance (OFF = not actuated): >5m Ω
Initial contact Resistance (ON = actuated): < 7.5 Ω

Mechanical Data:

Actuating force: 5-15N
Temperature: -40 to +125°C
Protection class: IP68

Other Data:

Materials Front Panel Stainless Steel, Aluminum
Lettering Laser engraving / anodize printing

Dimensions: first dimensions are in mm while inches are shown as bracketed numbers.
Tolerance: The general tolerance for dimensions in this brochure is ± 0,3 (.012).
Dimensions, specifications and data shown in this brochure are subject to change without notice.

Mounting accessories standard hardware supplied :4 screws and 1 Sealing

Packing unit: 1 piece

For options not listed above, please contact LANGIR.

The appearance of the products listed on this file, color, parameters are for reference only, issued a kind of LANGIR Company shall prevail.
LANGIR Company reserves the right to modify or cancel the relevant parameters of this file does not advance notice.
If in doubt, please contact customer service hotline.

KPF34

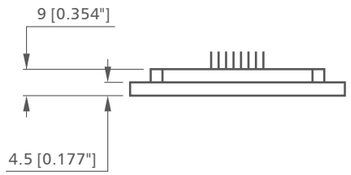

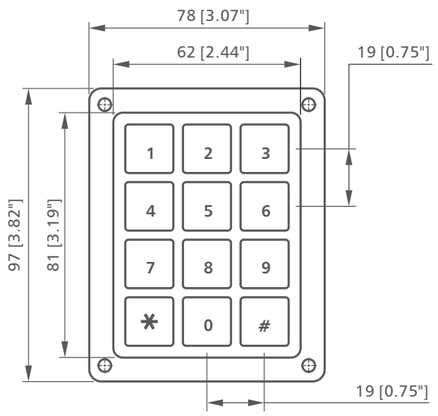

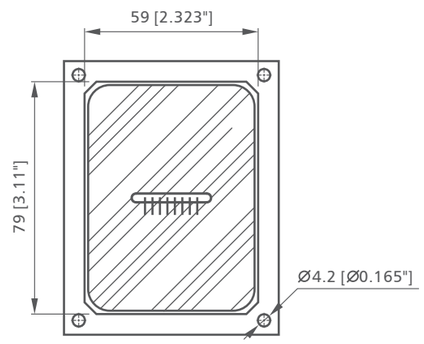

3x4

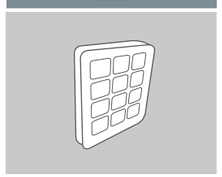

Graphic

KEY / PIN	3	6	9	#	2	5	8	0	1	4	7	*
1	■	■	■	■								
3					■	■	■	■				
4									■	■	■	■
5	■				■				■			
6		■				■				■		
7			■				■				■	
8				■				■				■

KPZ34

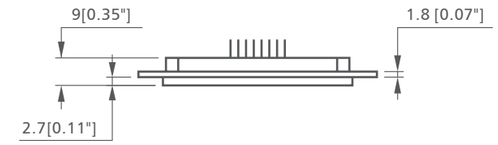

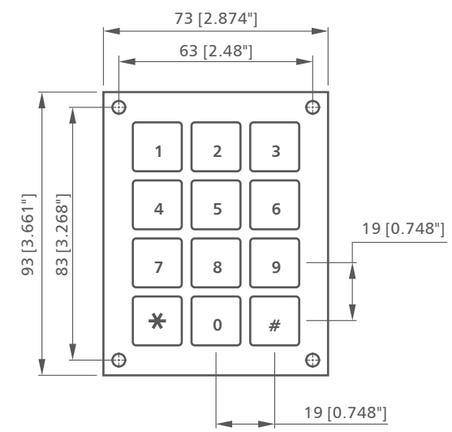

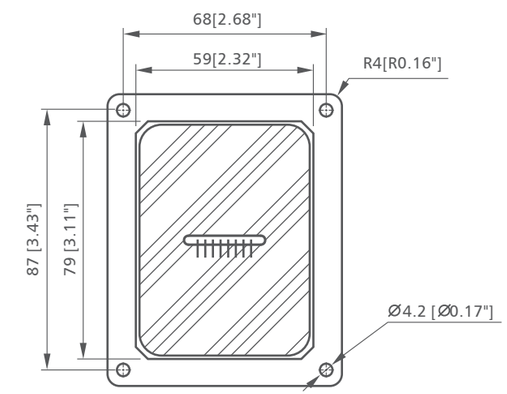

3x4

Graphic

KEY / PIN	3	6	9	#	2	5	8	0	1	4	7	*
1	■	■	■	■								
3					■	■	■	■				
4									■	■	■	■
5	■				■				■			
6		■				■				■		
7			■				■				■	
8				■				■				■

KPF43

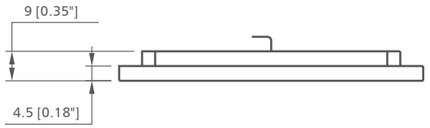

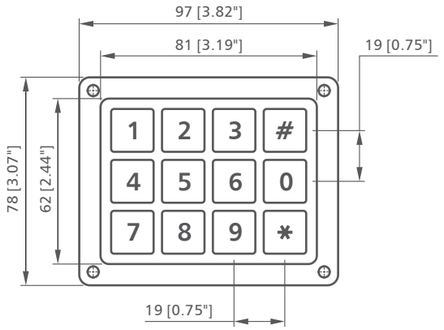

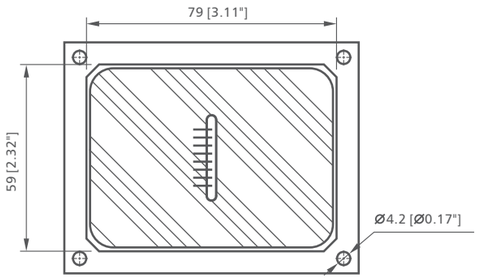

4x3

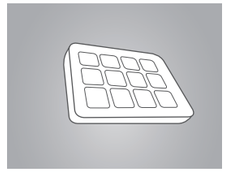

Graphic

KEY / PIN	#	0	*	3	6	9	2	5	8	1	4	7
1	■	■	■									
3				■	■	■						
4							■	■	■			
5										■	■	■
6	■			■			■			■		
7		■			■			■			■	
8			■			■			■			■

KPZ43

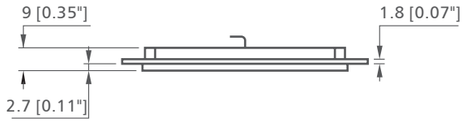

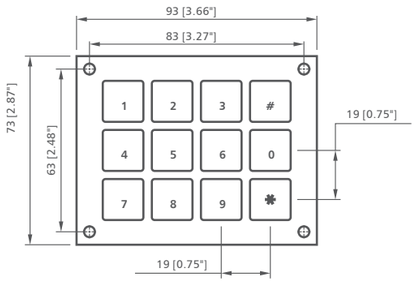

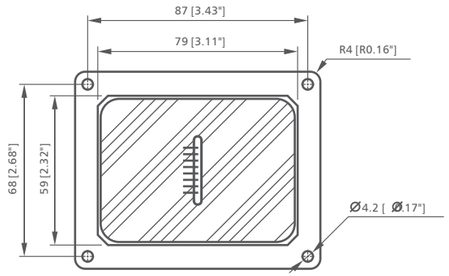

4x3

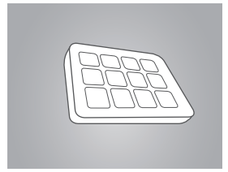

Graphic

KEY / PIN	#	0	*	3	6	9	2	5	8	1	4	7
1	■	■	■									
3				■	■	■						
4							■	■	■			
5										■	■	■
6	■			■			■			■		
7		■			■			■			■	
8			■			■			■			■

KPF44

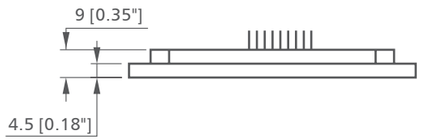

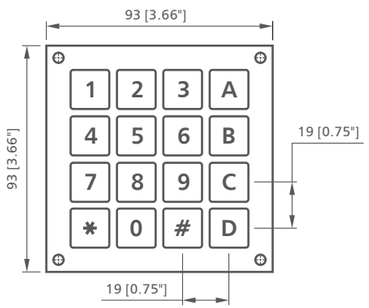

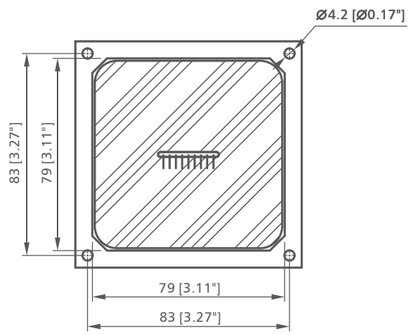

4x4

Graphic

KEY / PIN	A	B	C	D	3	6	9	#	2	5	8	0	1	4	7	*
1	■	■	■	■												
3					■	■	■	■								
4									■	■	■	■				
5													■	■	■	■
6	■				■				■				■			
7		■				■				■				■		
8			■				■				■				■	
9				■				■				■				■

KPZ44

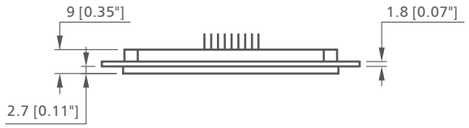

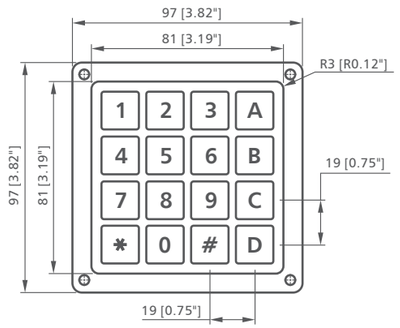

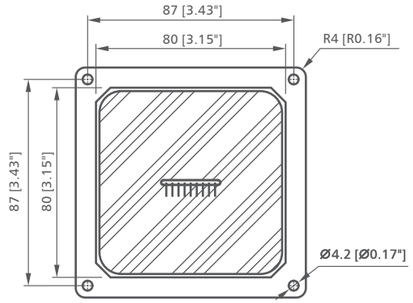

4x4

Graphic

KEY / PIN	A	B	C	D	3	6	9	#	2	5	8	0	1	4	7	*
1	■	■	■	■												
3					■	■	■	■								
4									■	■	■	■				
5													■	■	■	■
6	■				■				■				■			
7		■				■				■				■		
8			■				■				■				■	
9				■				■				■				■

KPF45

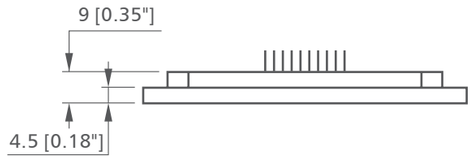

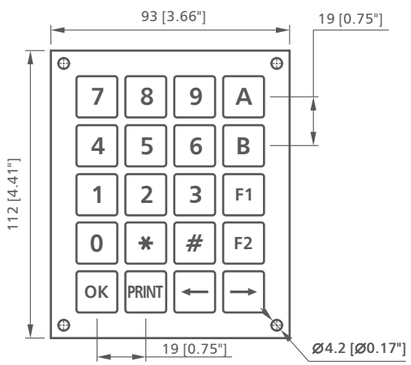

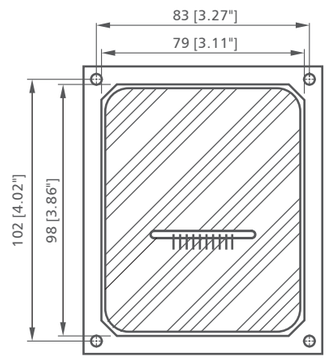

4x5

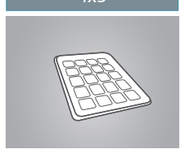

Graphic

KEY / PIN	A	B	F1	F2	→	9	6	3	#	←	8	5	2	*	Print	7	4	1	0	OK
1	■	■	■	■	■															
3						■	■	■	■	■										
4											■	■	■	■	■					
5																■	■	■	■	■
6	■					■					■					■				
7		■					■					■					■			
8			■					■					■					■		
9				■					■					■					■	
10					■					■					■					■

KPF54

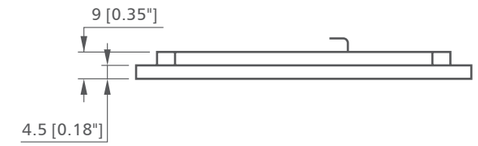

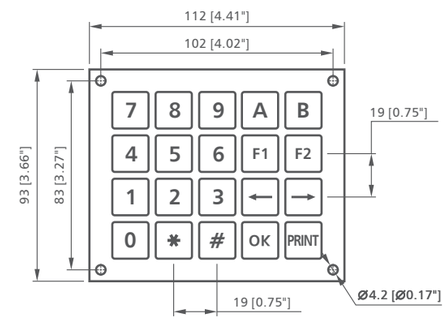

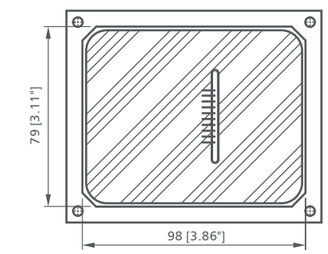

5x4

Graphic

KEY / PIN	B	F2	→	Print	A	F1	←	OK	9	6	3	#	8	5	2	*	7	4	1	0
1	■	■	■	■																
3					■	■	■	■												
4									■	■	■	■								
5													■	■	■	■				
6																	■	■	■	■
7	■				■				■				■				■			
8		■				■				■				■				■		
9			■				■				■				■				■	
10				■				■				■				■				■